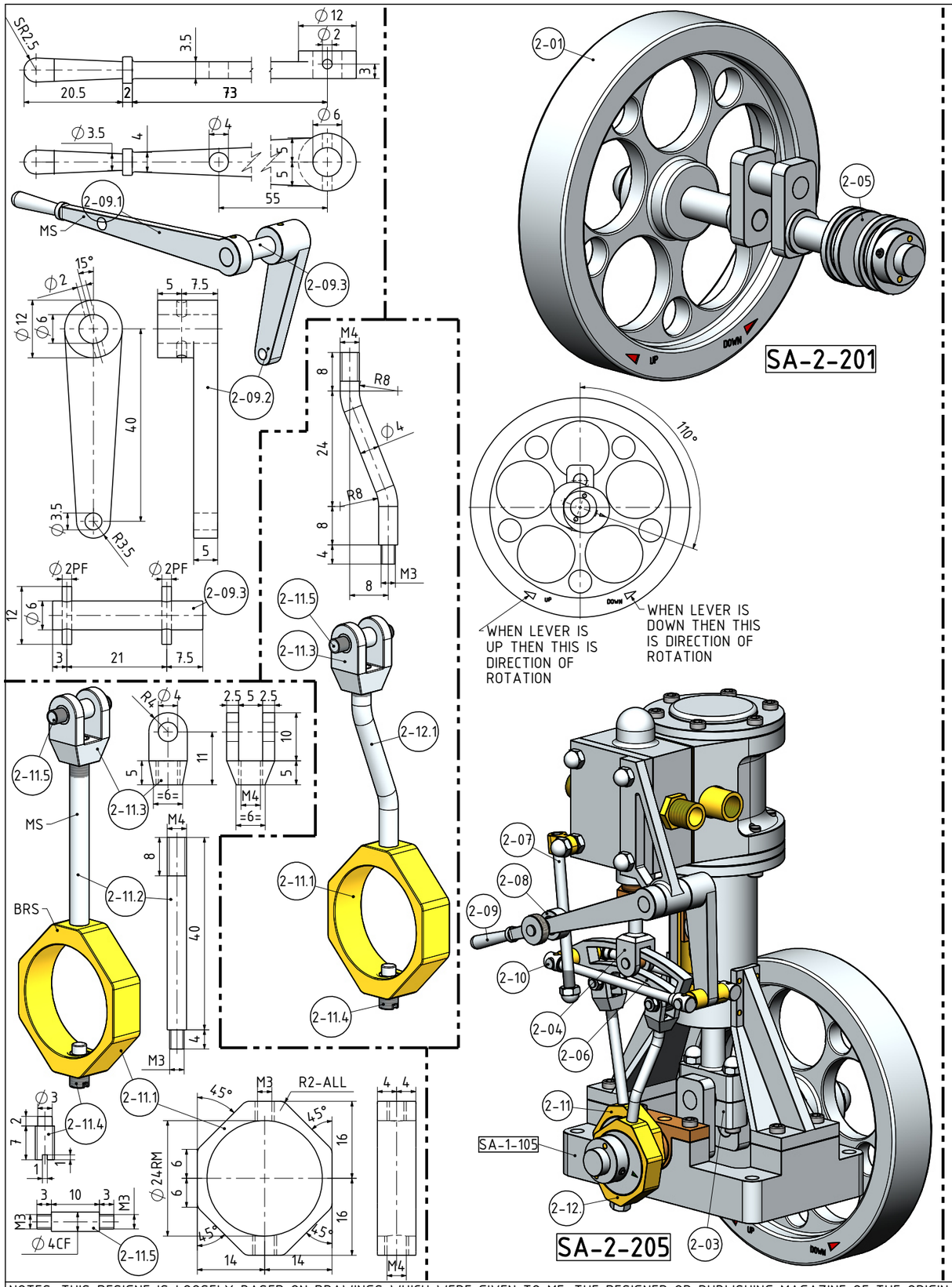

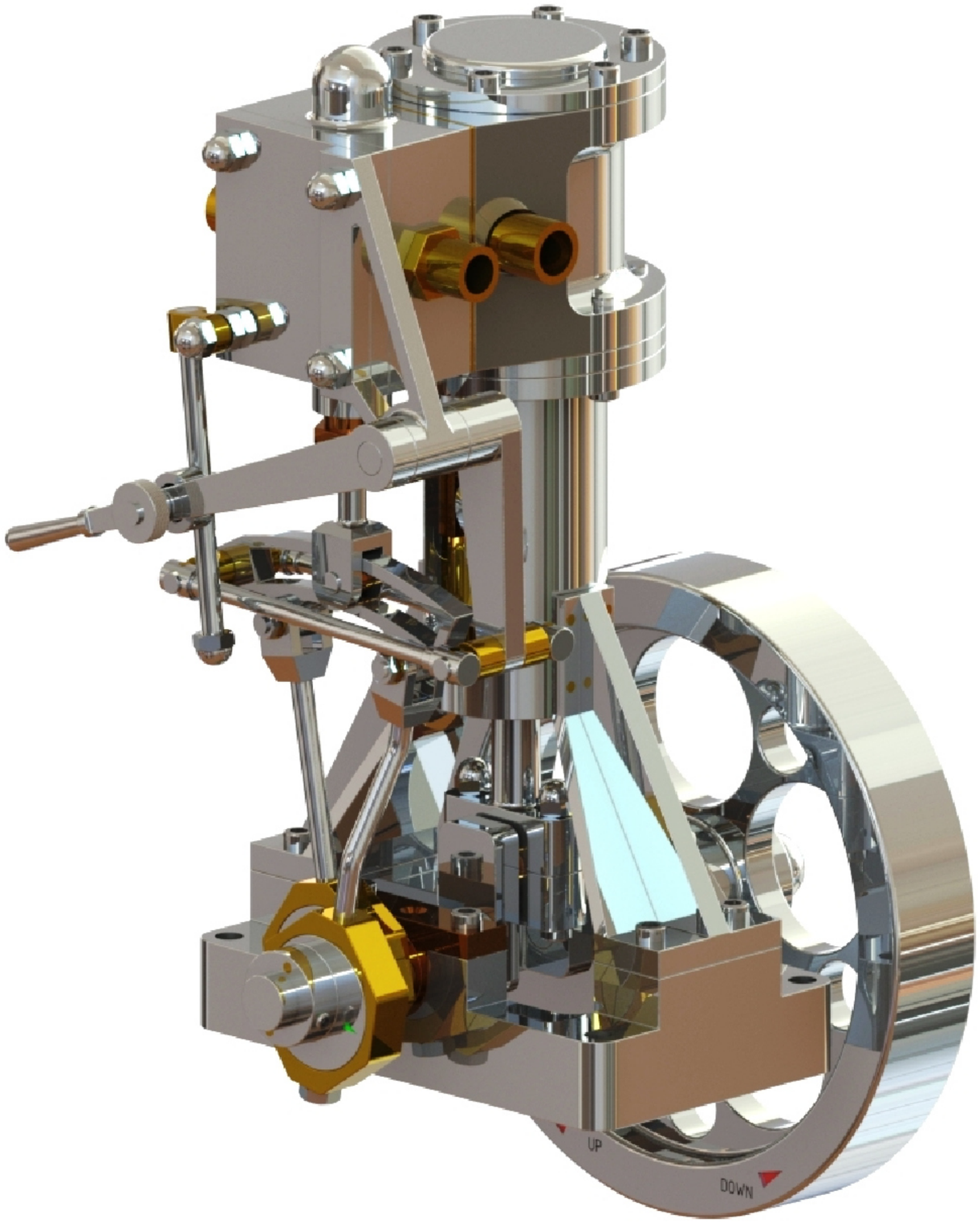

STUART 10V

NOTES: THIS DESIGNE IS LOOSELY BASED ON DRAWINGS WHICH WERE GIVEN TO ME. THE DESIGNER OR PUBLISHING MAGAZINE OF THE ORIGINAL DRAWINGS IS UNKNOWN. THE ONLY REFERENCE IS A DRAWINGNUMBER: DRG. 70207. THIS ENGINE IS 1.5 TIMES LARGER THAN THE ORIGINAL

TITLE 1 CYLINDER VERTICAL STEAM ENGINE WITH REVERSER (BORE=30mm x STROKE=28mm)	DRAWING CONTENTS PARTS AND ASSEMBLIES, RENDERED PICTURE	PROJECT No 09C-50-00 JDW DRAUGHTING SERVICES J.A.M. DE WAAL. 12 BRIGHTWELL STREET PAPAKURA 2110. NEW ZEALAND. PHONE: 0064 09 2988815. MOB: 0211791000 E-MAIL: dewaal@xtra.co.nz.	PROJECTION JDWDS MODEL SCALE: 1:1 DWG SCALE: 1:1 @A3 OR AS SHOWN DATE SEPTEMBER 2020 Copyright © J.A.M. DE WAAL PAPAKURA NZ SHEET: 04 OF 04 A3 No: 09C-50-00-SHT04

DRAWINGS ARE FOR PERSONAL USE ONLY NOT FOR COMMERCIAL PURPOSES