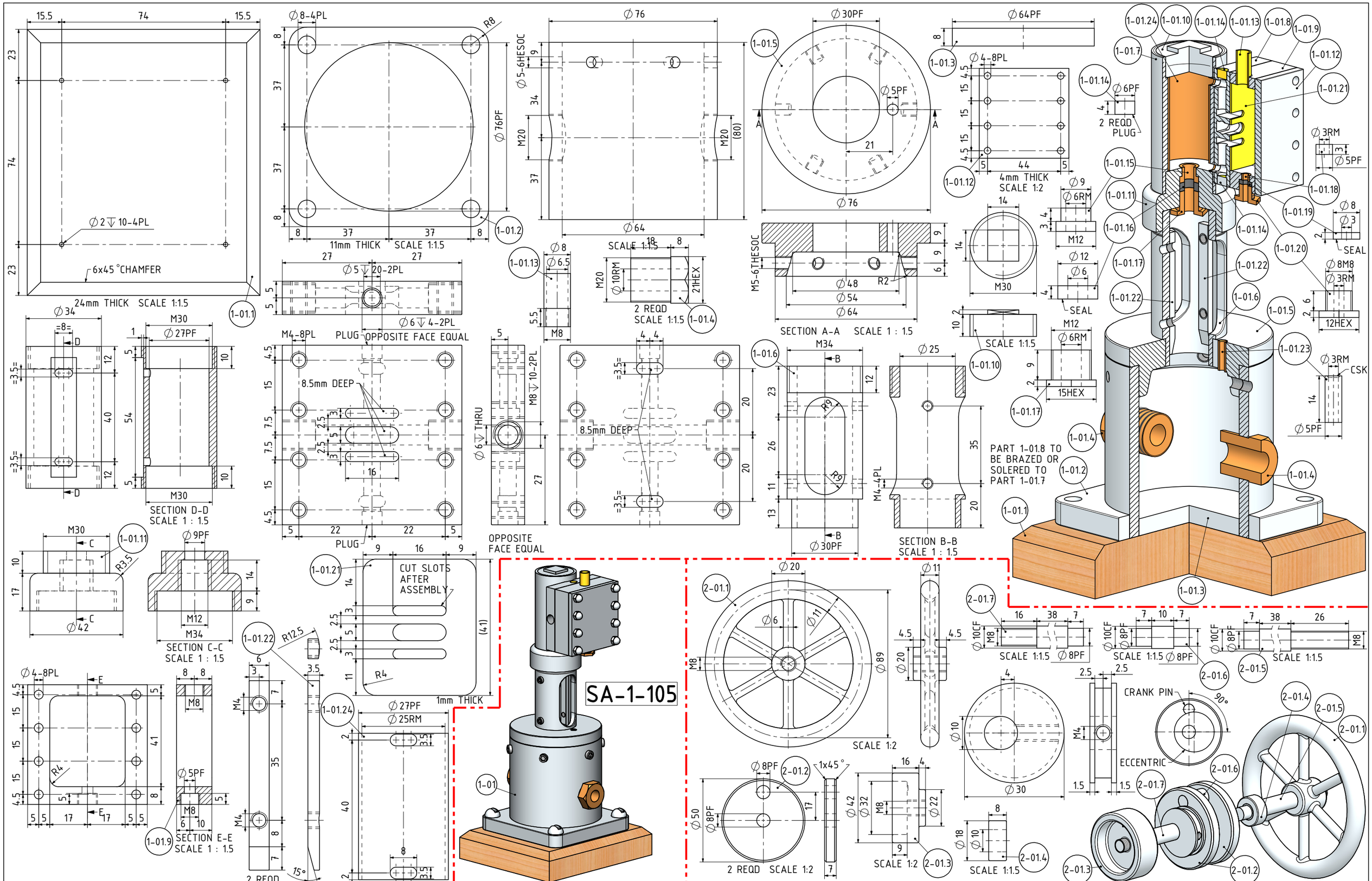

NOTES: THE ORIGINAL DRAWINGS WERE GIVEN TO ME. THE ORIGINAL DRAWINGS WERE PUBLISHED IN THE "POPULAR SCIENCE MONTHLY" MAGAZINE OF FEBRUARY 1924 PAGE 108. ARTICLE TITLE: "UNIQUE STEAM ENGINE IS SIMPLY BUILT FROM CHEAP, EASILY OBTAINABLE PARTS"

TITLE

1 CYLINDER VERTICAL NON REVERSABLE STEAM ENGINE OF 1924 (B=25mm S=34mm)

DRAWING CONTENTS

PARTS AND ASSEMBLIES

PROJECT No 09C-66-00

JDW DRAUGHTING SERVICES

J.A.M. DE WAAL. 12 BRIGHTWELL STREET PAPAKURA 2110. NEW ZEALAND. PHONE: 0064 09 2988815. MOB: 0211791000 E-MAIL: dewaal@xtra.co.nz.

PROJECTION JDWDS

MODEL SCALE: 1:1

DWG SCALE: 1:1 @A3 OR AS SHOWN

DATE FEBRUARY 2025

Copyright © J.A.M. DE WAAL PAPAKURA NZ

SHEET: 02 OF 03 A3 No:09C-66-00-SHT-02

DRAWINGS ARE FOR PERSONAL USE ONLY NOT FOR COMMERCIAL PURPOSES