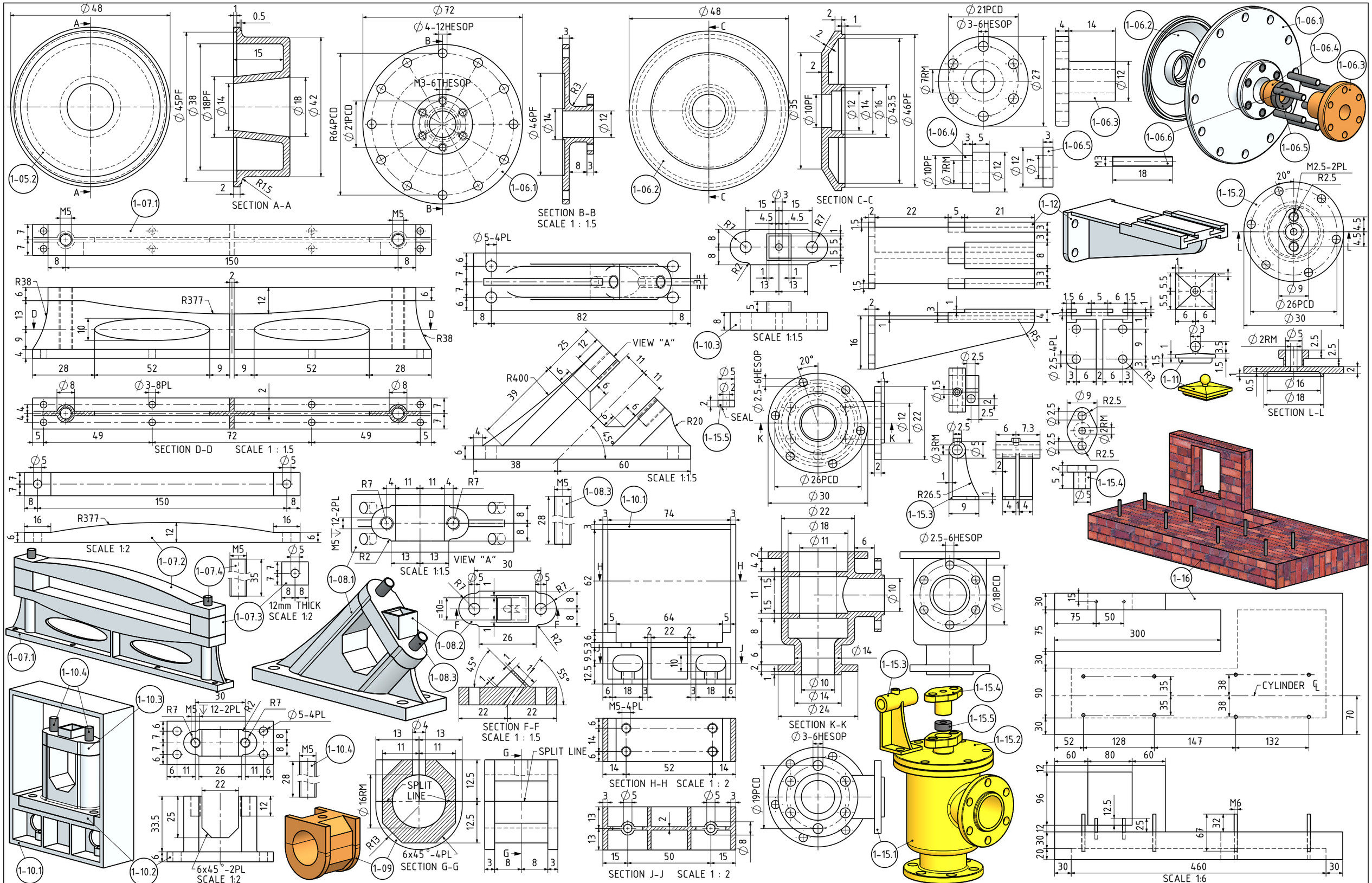

NOTES: SOME OF THE ORIGINAL DESIGN DRAWINGS WERE PUBLISHED ON THE "MODELENGINEERINGWEBSITE" WEBSITE. THIS ENGINE WAS ORIGINALLY BUILT BY MESSRS. WHIELDON, LECKY AND LUCAS, ENGINEERS, LONDON (NO DATE)

TITLE

A MODEL OF A 60HP HIGH PRESSURE STEAM ENGINE WITH 4 SLIDE VALVES. (B=48 S=100)

DRAWING CONTENTS

PARTS AND ASSEMBLIES

PROJECT No 09B-26-00

JDW DRAUGHTING SERVICES

J.A.M. DE WAAL. 12 BRIGHTWELL STREET PAPAKURA 2110. NEW ZEALAND. PHONE: 0064 09 2988815. MOB: 0211791000 E-MAIL: dewaal@xtra.co.nz.

PROJECTION

JDWDS

DATE JUNE 2020

MODEL SCALE: APPROX 1:12

DWG SCALE: 1:1 @A3 OR AS SHOWN

Copyright © J.A.M. DE WAAL PAPAKURA NZ

SHEET: 04 OF 07 A3 No: 098-26-00-SHT04

DRAWINGS ARE FOR PERSONAL USE ONLY NOT FOR COMMERCIAL PURPOSES