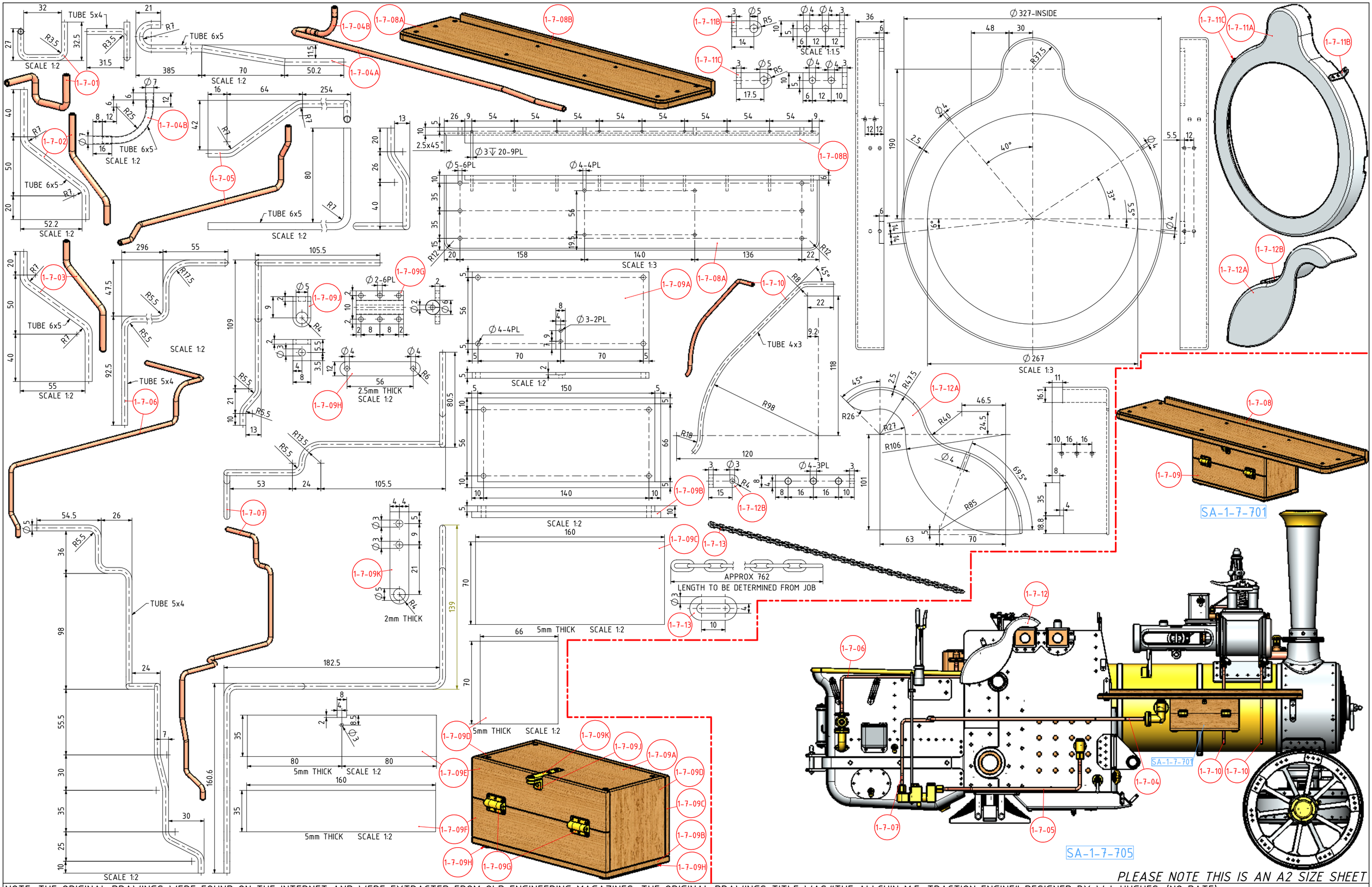

PLEASE NOTE THIS IS AN A2 SIZE SHEET

NOTE: THE ORIGINAL DRAWINGS WERE FOUND ON THE INTERNET AND WERE EXTRACTED FROM OLD ENGINEERING MAGAZINES. THE ORIGINAL DRAWINGS TITLE WAS:"THE ALLCHIN M.E. TRACTION ENGINE" DESIGNED BY W.J. HUGHES. (NO DATE)

TITLE A MODEL OF A STEAM TRACTION ENGINE AS BUILT BY W. ALLCHIN LTD, NORTHAMPTON	DRAWING CONTENTS PARTS AND ASSEMBLIES	PROJECT No: 08-13-00 JDW DRAUGHTING SERVICES J.A.M. DE WAAL. 12 BRIGHTWELL STREET PAPAKURA 2110. NEW ZEALAND. PHONE: 0064 09 2988815. MOB: 0211791000 E-MAIL: dewaal@xtra.co.nz.	PROJECTION JDWDS	MODEL SCALE: 1:1 DWG SCALE:1:1 @ A2 OR AS SHOWN
			DATE: FEBRUARY 2019	Copyright © J.A.M. DE WAAL PAPAKURA NZ
			SHEET: 21 OF 27	A2 No 08-13-00-SHT-21

FOR PERSONAL USE ONLY NOT FOR COMMERCIAL PURPOSES