BARREL RETAINING SCREW POSITION

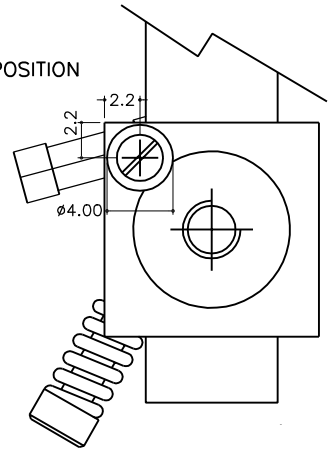


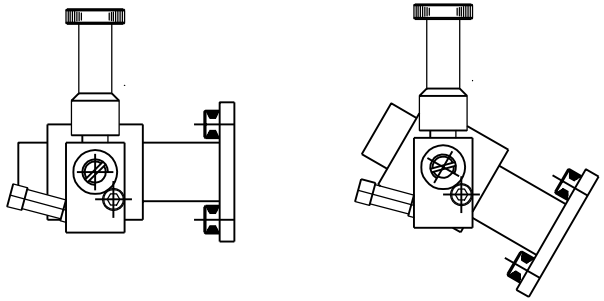

ALTERNATIVE MOUNTING POSITIONS

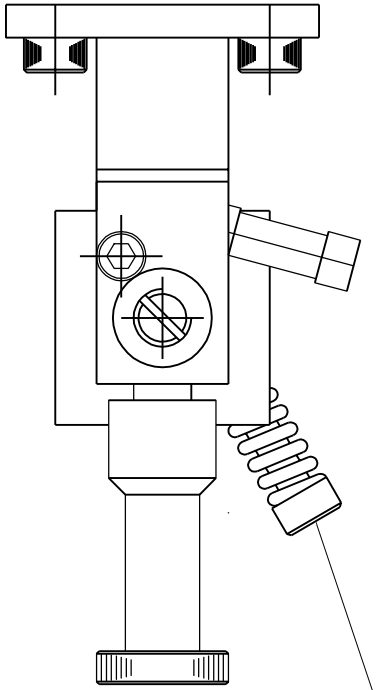

IDLE THROTTLE STOP

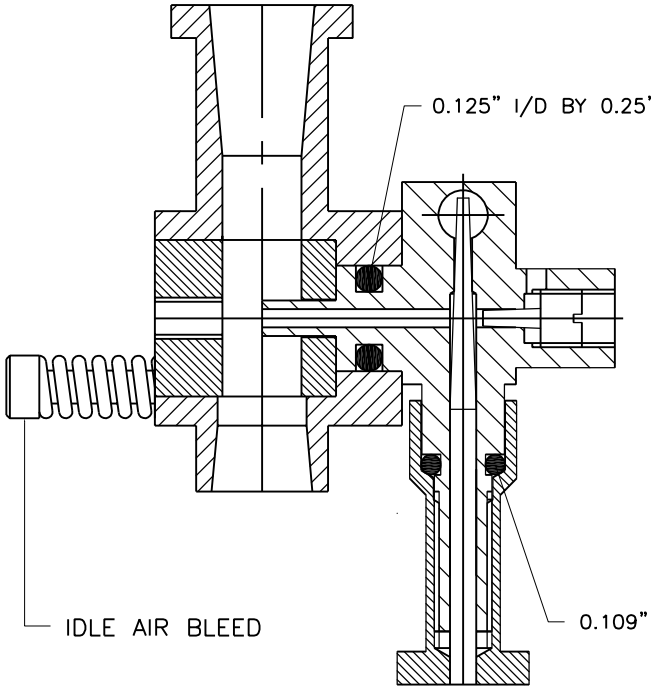


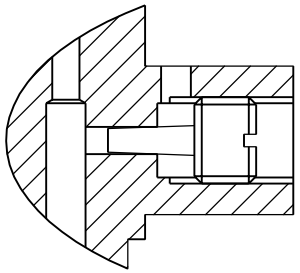

AIR BLEED ACROSS JET