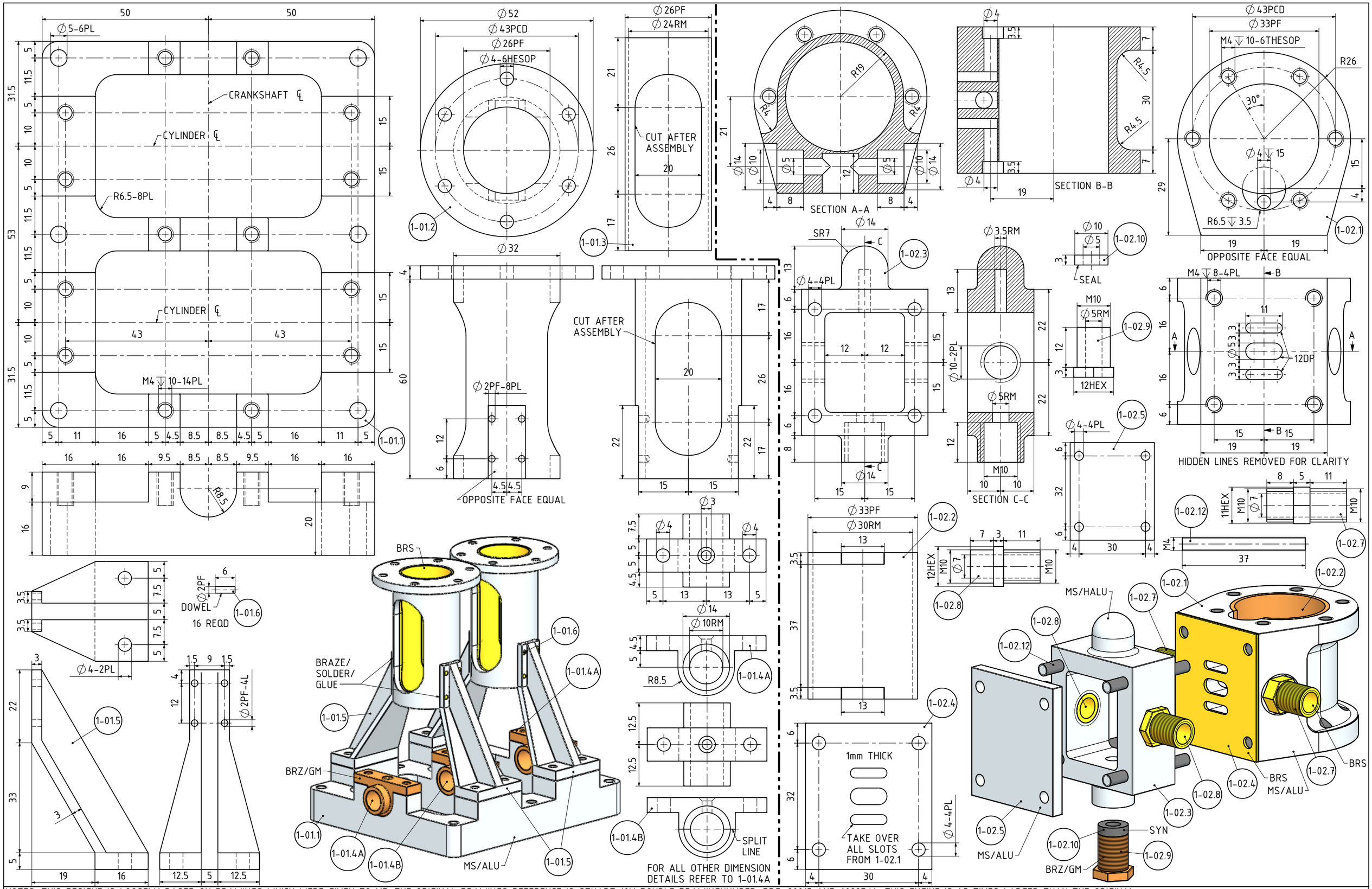

NOTES: THIS DESIGNE IS LOOSELY BASED ON DRAWINGS WHICH WERE GIVEN TO ME. THE ORIGINAL DRAWINGS REFERENCE IS STUART 10V DOUBLE DRAWINGNUMBER: DRG. 80015 AND 60927/A. THIS ENGINE IS 1.5 TIMES LARGER THAN THE ORIGINAL

TITLE 2 CYLINDER VERTICAL STEAM ENGINE NON REVERSING (BORE=30mm x STROKE=28mm)	DRAWING CONTENTS PARTS AND ASSEMBLIES	PROJECT No 09C-51-00 JDW DRAUGHTING SERVICES J.A.M. DE WAAL. 12 BRIGHTWELL STREET PAPAKURA 2110. NEW ZEALAND. PHONE: 0064 09 2988815. MOB: 0211791000 E-MAIL: dewaal@xtra.co.nz.	PROJECTION JDWDS MODEL SCALE: 1:1 DWG SCALE: 1:1 @A3 OR AS SHOWN DATE SEPTEMBER 2020 Copyright © J.A.M. DE WAAL PAPAKURA NZ SHEET: 02 OF 04 A3 No: 09C-51-00-SHT02

DRAWINGS ARE FOR PERSONAL USE ONLY NOT FOR COMMERCIAL PURPOSES