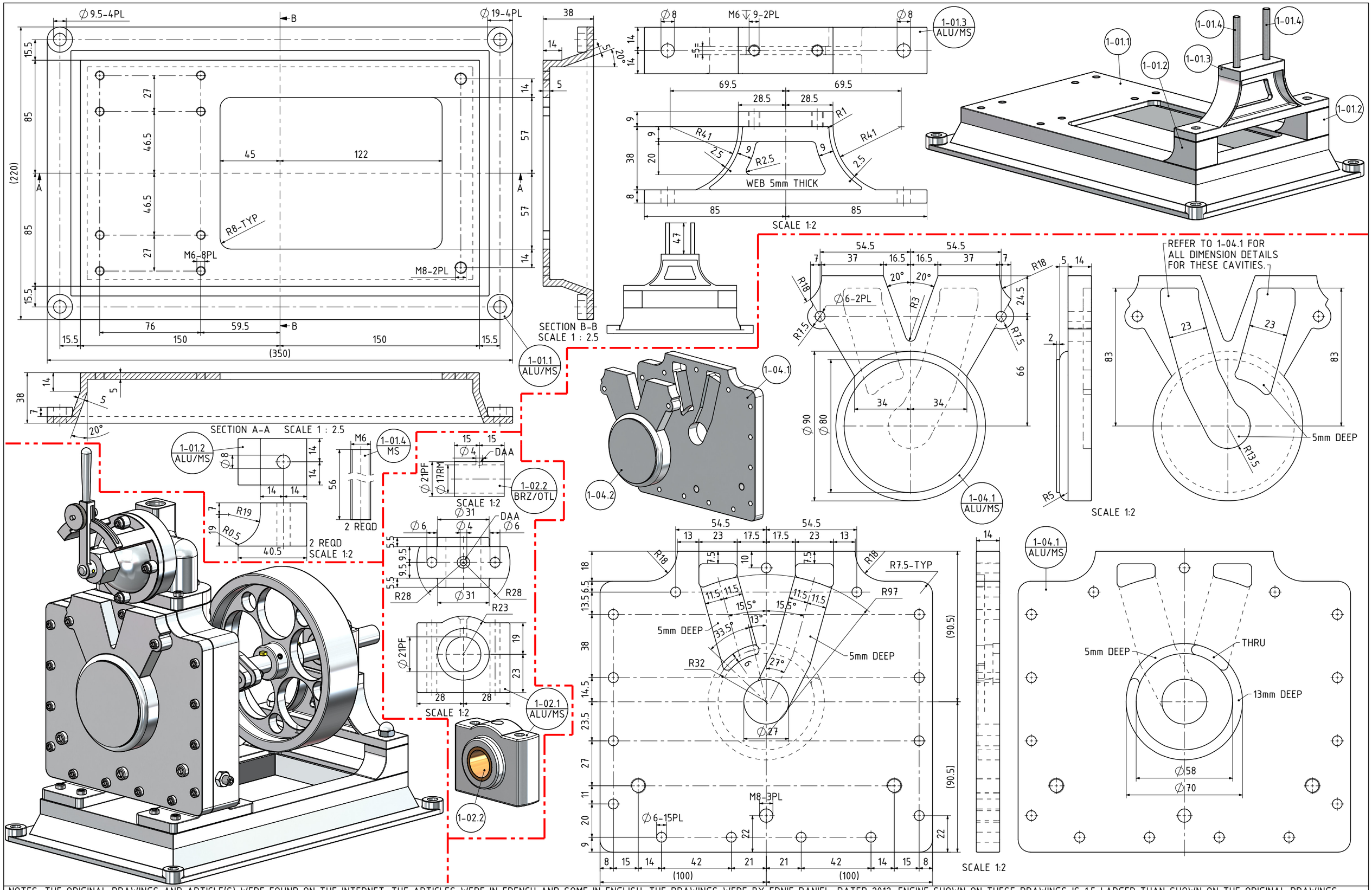

NOTES: THE ORIGINAL DRAWINGS AND ARTICLE(S) WERE FOUND ON THE INTERNET. THE ARTICLES WERE IN FRENCH AND SOME IN ENGLISH. THE DRAWINGS WERE BY ERNIE DANIEL, DATED 2012. ENGINE SHOWN ON THESE DRAWINGS IS 1.5 LARGER THAN SHOWN ON THE ORIGINAL DRAWINGS

TITLE
A MODEL OF A SQUARE PISTON STEAM ENGINE DESIGNED BY W. F. DAKE (Ca 1888)

DRAWING CONTENTS
ISOMETRIC VIEW PARTS AND ASSEMBLIES

PROJECT No 09E-68-00

JDW DRAUGHTING SERVICES
J.A.M. DE WAAL. 12 BRIGHTWELL STREET PAPAKURA
2110. NEW ZEALAND. PHONE: 0064 09 2988815. MOB: 0211791000 E-MAIL: dewaal@xtra.co.nz.

PROJECTION JDWDS

DATE MAY 2025

MODEL SCALE: 1:1

DWG SCALE: 1:1 @A3 OR AS SHOWN

Copyright © J.A.M. DE WAAL PAPAKURA NZ

SHEET: 02 OF 05 | A3 | No:09E-68-00-SHT-02

DRAWINGS ARE FOR PERSONAL USE ONLY NOT FOR COMMERCIAL PURPOSES