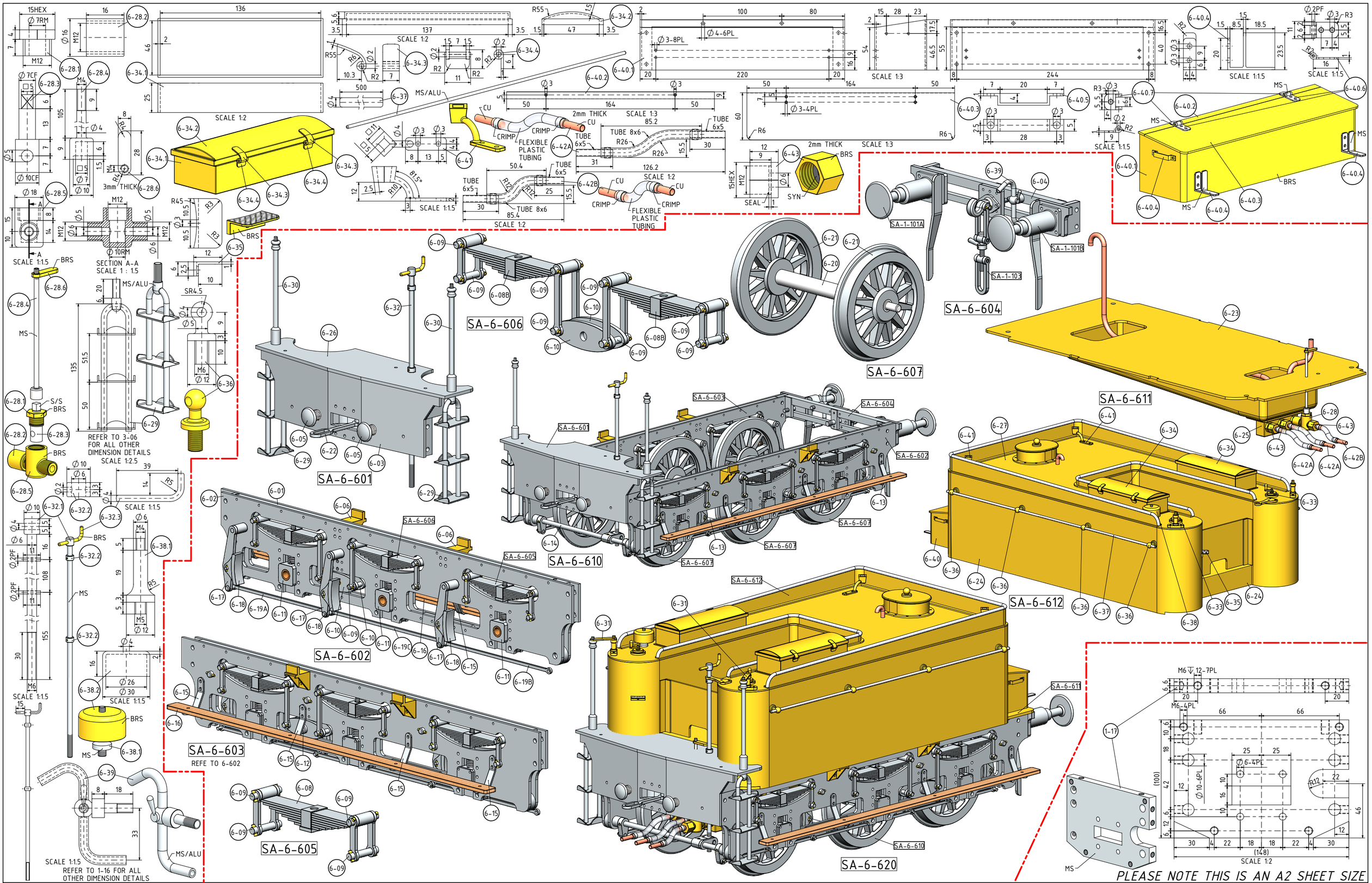

NOTES: THESE DRAWINGS ARE BASE ON AN ARTICLE AND DRAWING WHICH I FOUND IN SOME OLD MODEL ENGINEERING MAGAZINES CALLED THE "MODELBOUWER" OF 1987. THE DRAWINGS WERE NUMBERED 20.00.027 SHEETS 1 TO 15

TITLE COAL FIRED 2-4-0 STEAM LOCOMOTIVE CALLED "LEEUWENHOEK" FOR 7.25inch(184mm) GAUGE	DRAWING CONTENTS PARTS AND ASSEMBLIES	PROJECT No: 07A-09-00 JDW DRAUGHTING SERVICES J.A.M. DE WAAL. 12 BRIGHTWELL STREET PAPAKURA 2110. NEW ZEALAND. PHONE: 0064 09 2988815. MOB: 0211791000 E-MAIL: dewaal@xtra.co.nz.	PROJECTION JDWDS DATE: SEPT 2017 SHEET: 17 OF 18	MODEL SCALE: 1:7.8 DWG SCALE:1:1 @ A2 OR AS SHOWN Copyright © J.A.M. DE WAAL PAPAKURA NZ A2 No: NS-1125-17