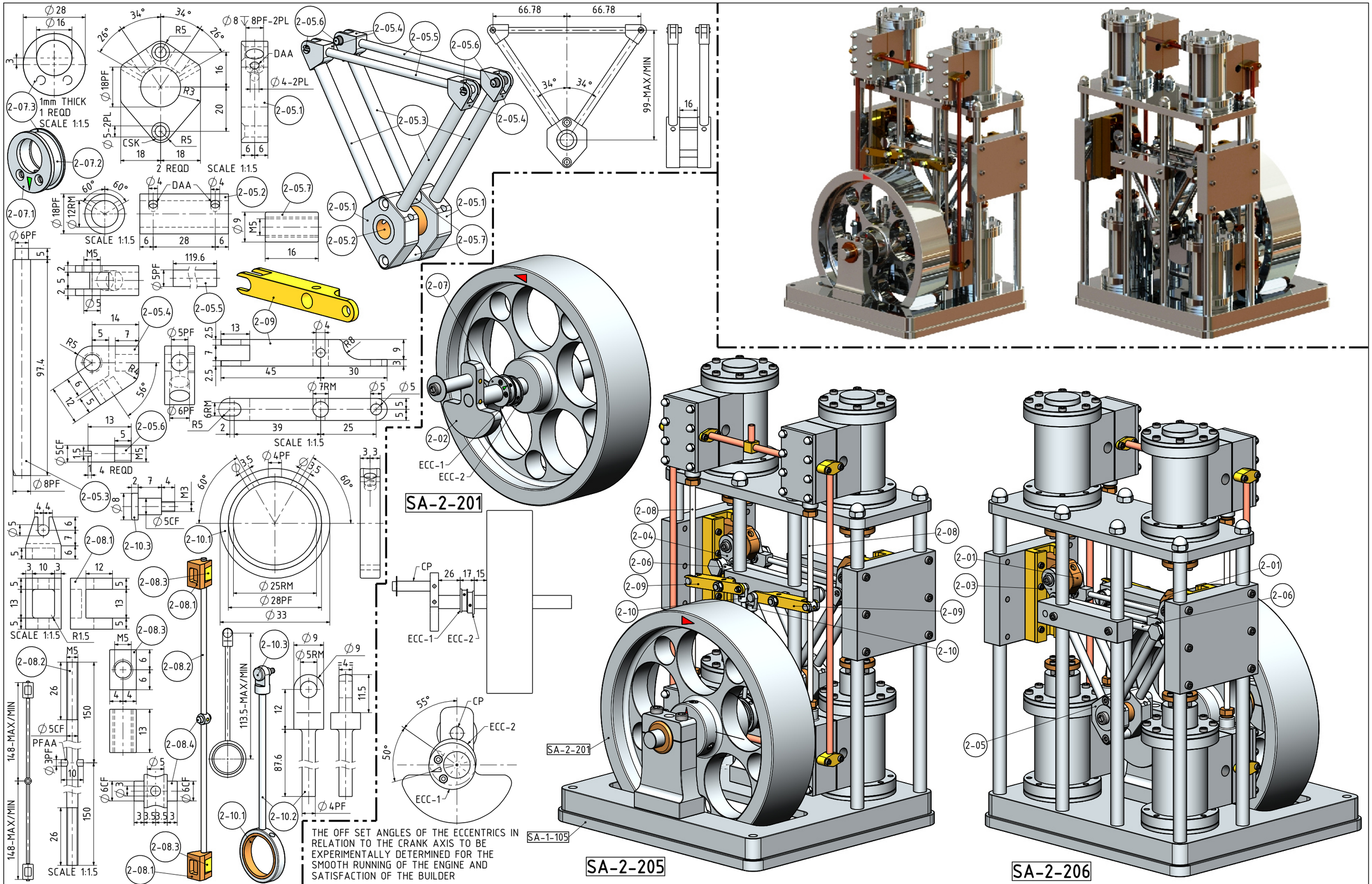

THE OFF SET ANGLES OF THE ECCENTRICS IN RELATION TO THE CRANK AXIS TO BE EXPERIMENTALLY DETERMINED FOR THE SMOOTH RUNNING OF THE ENGINE AND SATISFACTION OF THE BUILDER

NOTES: THE ORIGINAL DESIGN/DRAWINGS OF A GAS ENGINE WERE PUBLISHED ON THE INTERNET. ("MODELENGINEERINGWEBSITE" OWNED/OPERATED BY DAVID CARPENTER.) i HAVE CONVERTED THIS GAS ENGINE TO A STEAM ENGINE.

TITLE
AN EXPERIMENTAL 4 CYL. VERTICAL STEAM ENGINE CONVERTED FROM A GAS ENGINE

DRAWING CONTENTS
PARTS AND ASSEMBLIES RENDERED PICTURES

PROJECT No 09D-20-00

JDW DRAUGHTING SERVICES
J.A.M. DE WAAL. 12 BRIGHTWELL STREET PAPAKURA 2110. NEW ZEALAND. PHONE: 0064 09 2988815. MOB: 0211791000 E-MAIL: dewaal@xtra.co.nz.

PROJECTION JDWDS
DATE JUNE 2020

MODEL SCALE: APPROX 1:17.5
DWG SCALE: 1:1 @A3 OR AS SHOWN
Copyright © J.A.M. DE WAAL PAPAKURA NZ

SHEET: 04 OF 04 A3 No: 09D-20-00-SHT04

DRAWINGS ARE FOR PERSONAL USE ONLY NOT FOR COMMERCIAL PURPOSES