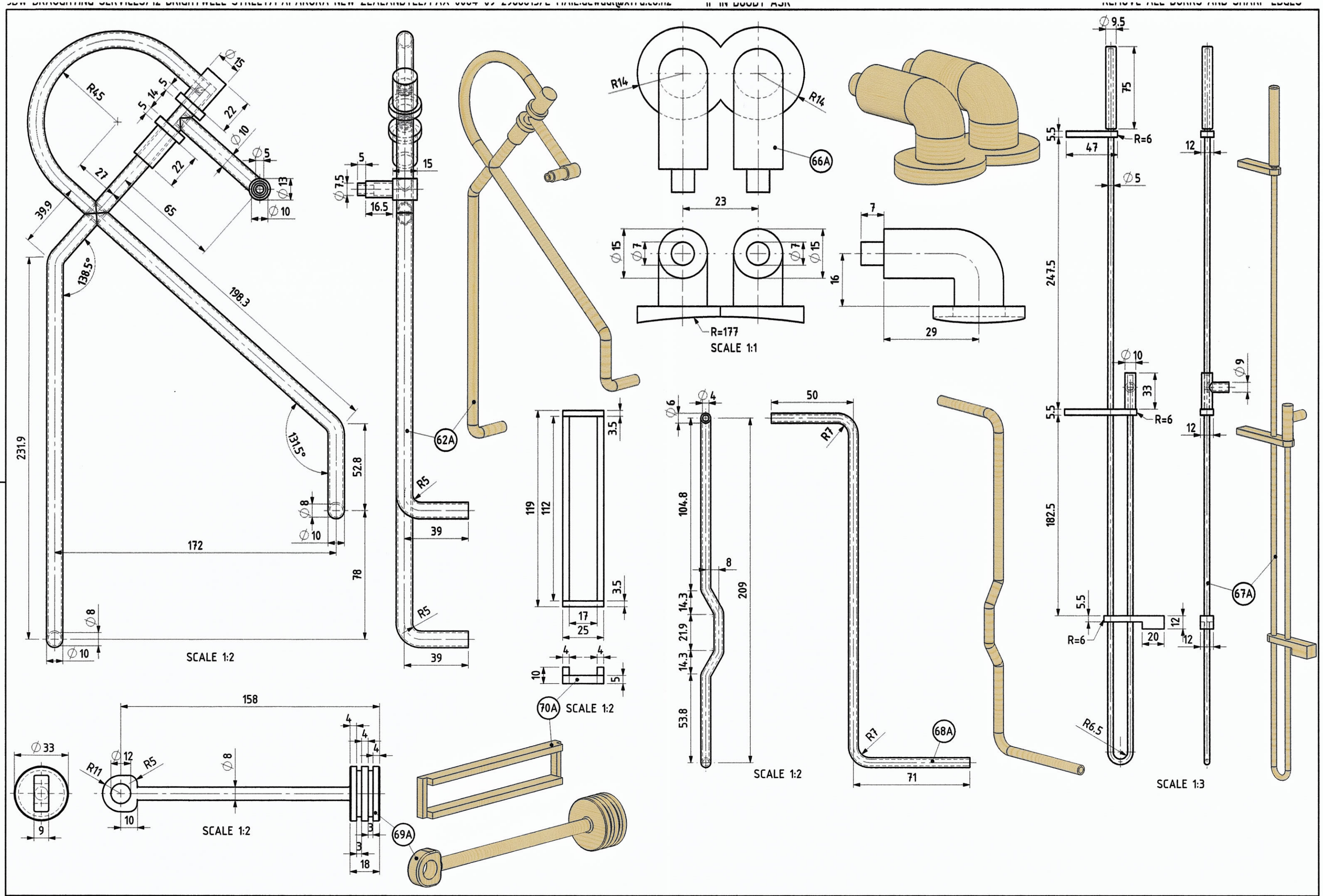

A3	TITLE 1829 STEPHENSON STEAM LOCOMOTIVE THE ROCKET PARTS	A ISSUED FOR CONSTRUCTION (REV / DESCRIPTION / DATE)	JDW DRAUGHTING SERVICES 12 BRIGHTWELL STREET PAPAKURA NEW ZEALAND TEL/FAX 0064-09-2988815 E-MAIL:dewaal@xtra.co.nz	DRAWN BY J.A.M. DE WAAL DATE FEB-2008	PROJECTION	DRAWING NUMBER 1829SRT SHEET 12 REV A
					SCALE AS STATED	