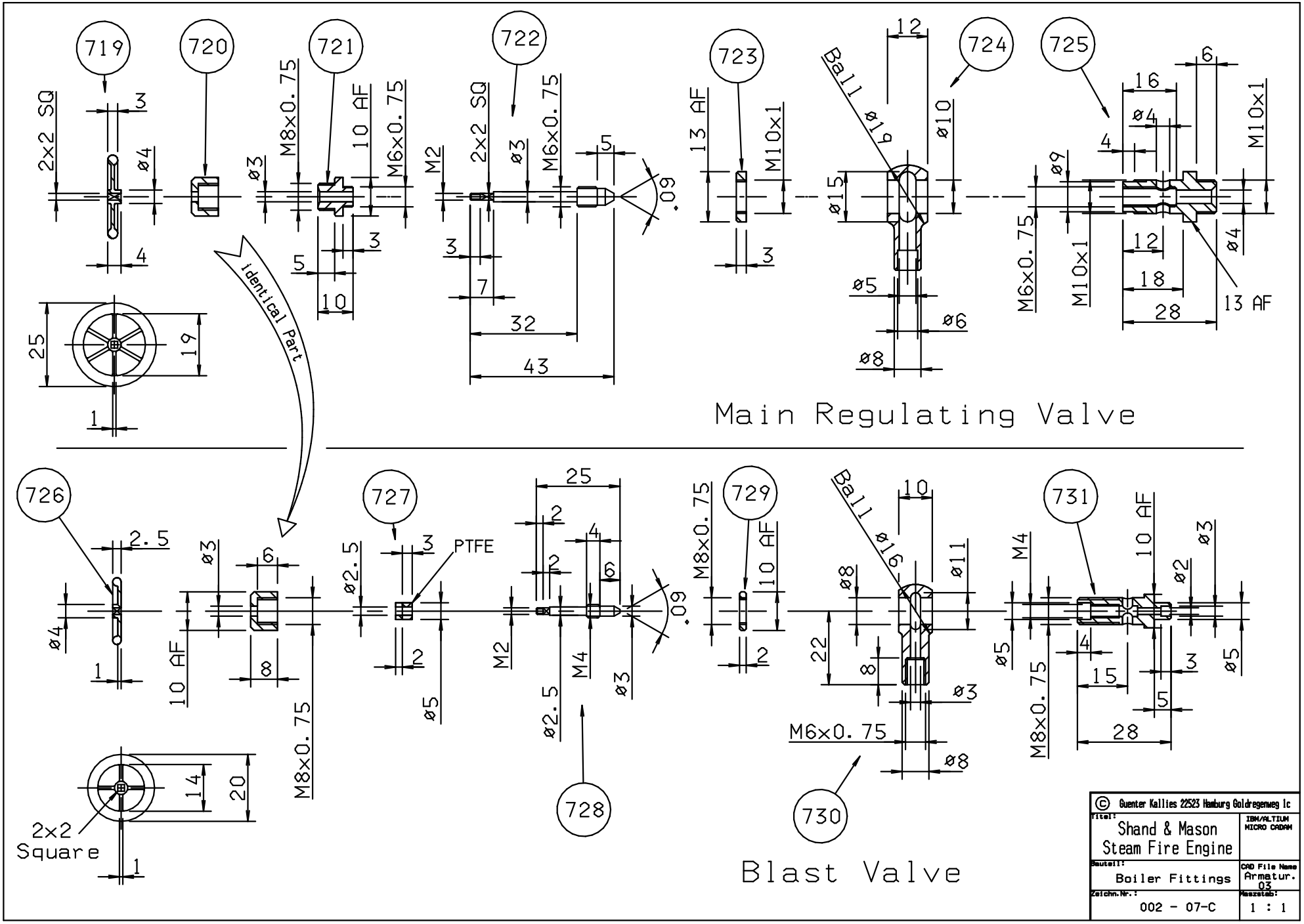

© Guenter Kallies 22523 Hamburg Goldregenweg 1c

Titel: Shand & Mason Steam Fire Engine	IBM/ALTIUM MICRO CADAM
Bauteil: Boiler Fittings	CAD File Name Armatur. 03
Zeichn.Nr.: 002 - 07-C	Maszstab: 1 : 1