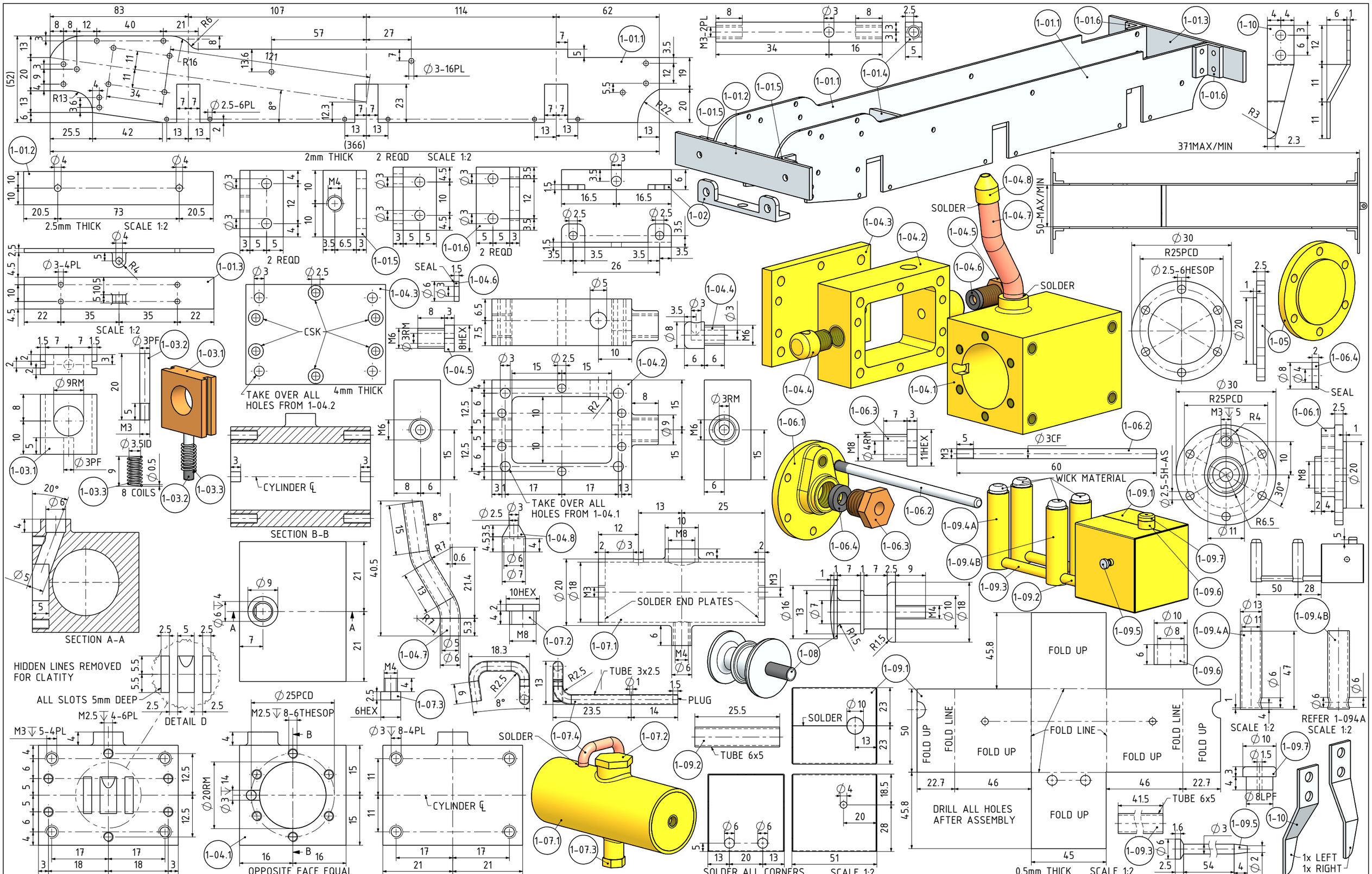

NOTES: THE ORIGINAL DRAWINGS WERE DOWNLOADED FROM THE "MODELENGINEERINGWEBSITE" WEBSITE. THE ORIGINAL DRWAINGS WERE PUBLISHED IN THE MODEL ENGINEER MAGAZINE UNDER THE TITLE "THE SIX YEAR-OLD'S "4F" BY L.B.S.C. DATED 7 DECEMBER 1944 PAGES 539 TO 543 AND THE TENDER WAS PUBLISHED ON 21 DECEMBER 1944 PAGES 589 AND 590

TITLE

A SIMPLIFIED SPIRIT FIRED LOCOMOTIVE OF THE L.M.S CLASS "4F" (2.5"/63.5mm GAUGE)

DRAWING CONTENTS

PARTS AND ASSEMBLIES

PROJECT No 07B-18-00

JDW DRAUGHTING SERVICES

J.A.M. DE WAAL. 12 BRIGHTWELL STREET PAPAKURA 2110. NEW ZEALAND. PHONE: 0064 09 2988815. MOB: 0211791000 E-MAIL: dewaal@xtra.co.nz.

PROJECTION

JDWDS

DATE JANUARY 2020

MODEL SCALE: 1:1

DWG SCALE: 1:1 @A3 OR AS SHOWN

Copyright © J.A.M. DE WAAL PAPAKURA NZ

SHEET: 03 OF 08 A3 No: 07B-18-00-SHT03

DRAWINGS ARE FOR PERSONAL USE ONLY NOT FOR COMMERCIAL PURPOSES