NOTES:
0. ALL DRAWINGS ARE IN METRIC MEASUREMENTS
1. ALL ENGINEERING PRACTICES SHALL BE APPLIED WITH REGARDS TO HOLE AND SHAFT TOLERANCES.
2. WHERE SCREWS OR BOLTS ARE USED THE CLEARANCE HOLES SHALL BE APPROXIMATELY 5% TO 8% LARGER THAN THE MATCHING TAPPED HOLE.
3. PREFERABLY ALL TAPPED HOLES AND MATCHING SCREWS AND/OR BOLTS TO BE METRIC FINE (MF)
4. MATERIALS SPECIFIED ON THE DRAWINGS ARE INDICATIVE ONLY. THE BUILDER CAN MAKE HIS/HER OWN MATERIAL CHOICE.
5. ALL CONNECTIONS/JOINTS WHICH HAVE STEAM PRESSURE APPLIED TO IT SHALL BE SILVER/HARD SOLDERED.
6. COMPRESSION SPRINGS ARE DRAWN IN COMPRESSED STATE (CP), UNCOMPRESSED STATE IS APPROX 40% TO 60% LONGER THEN COMPRESSED STATE.
7. WHERE PREFERRED SCREW OR RIVETED CONNECTIONS CAN BE OMITTED AND PARTS CAN BE BONDED TOGETHER BY USING EITHER HIGH STRENGTH GLUE, EPOXY RESIN, OR SOLDER.
8. PARTS WHICH ARE DIRECTLY EXPOSED TO STEAM AND/OR WATER SHOULD BE CONSTRUCTED USING NON-FERROUS OR NON CORROSIVE MATERIAL SUCH AS BRASS, BRONZE, GUNMETAL, STAINLESS STEEL, COPPER OR MONEL.
9. THE ORDER IN WHICH THE PARTS/COMPONENTS ARE MANUFACTURED AND THE MODEL IS ASSEMBLED IS ENTIRELY LEFT TO THE BUILDER/MODEL MAKER.
10. A COLOUR SCHEME FOR THIS PROJECT IS ENTIRELY LEFT UP TO THE MODEL MAKER.
11. THE MANNER IN WHICH THE PARTS/COMPONENTS ARE MANUFACTURED IS ENTIRELY LEFT UP TO THE BUILDER.
12. USE LOCTITE, ON SCREW OR PRESS FIT CONNECTIONS OR SURFACES WERE DEEMED NECESSARY TO PREVENT PARTS FROM LOOSENING.
13. WASHERS AND/OR SPRING WASHERS SHALL BE USED WHERE DEEMED NECESSARY.
14. INQUIRE AT THE APPROPRIATE AUTHORITIES WHETHER OR NOT THIS BOILER REQUIRE A PRESSURE TEST CERTIFICATE.
XX. ERRORS AND/OR OMISSIONS MAY OCCUR IN THE DRAWINGS, DO NOT HESITATE TO CONTACT ME SO THAT THE ERRORS/OMISSIONS CAN BE RECTIFIED.

ADDITIONAL NOTES ABOUT THESE DRAWINGS:
1) FASTENERS.
NO FASTENERS SUCH AS BOLTS, SCREWS, NUTS AND WASHERS HAVE BEEN SHOW ON THESE DRAWINGS. THE BUILDER TO CHOOSE ITS OWN PREFERRED TYPE OF FASTENERS.2) PRESSURE GAUGE.
THE RANGE OF THE PRESSURE GAUGE TO BE DETERMENT AFTER MAXIMUM BOILER PRESSURE IS ESTABLISHED AND THE AVAILABILITY ON THE MARKET. THE PRESSURE GAUGE IS A PROPRIETY ITEM. PRESSURE GAUGE IS NOT SHOWN ON THESE DRAWINGS
3) PIPING
PREFERABLY ALL PIPING TO BE COPPER. THE PIPING ON THE DRAWINGS ARE INDICATIVE ONLY. THE BUILDER TO ESTABLISH THE PIPE LENGTH AND ROUTE FROM WORK PIECE. THE PIPE SIZES ARE INDICATIVE ONLY. THE BUILDER TO ESTABLISH THE AVAILABILITY OF THE PIPE SIZE(S) FROM THE LOCAL SUPPLIER(S). THE PIPE NUT(S) TO BE ADJUSTED TO THE USED PIPE SIZE.
4) BOILER.
BEFORE STARTING: THE BOILER AS SHOWN ON THESE DRAWING SHOULD BE INSPECTED BY AN AUTHORISED PROFESSIONAL ENGINEER. THE RUNNING AND MAXIMUM BOILER PRESSURE TO BE CALCULATED. MAKE SURE THE THE BOILER FULLY COMPLIES WITH THE LOCAL RULES AND REGULATIONS OF MODEL BOILERS. A COMPLIANCE AND TEST CERTIFICATE SHOULD BE OBTAINED.
BOILER INSULATION AND BOILER CLADDING ARE NOT SHOWN ON THESE DRAWINGS.
IF BOILER INSULATION AND BOILER CLADDING ARE PREFERRED THEN THE THE FOLLOWING COULD BE CONSIDERED: INSULATION MATERIAL 2mm THICK AND CLADDING 0.5mm THICK.
THE BOILER STRAPS DIAMETER SHOULD BE ADJUSTED ACCORDINGLY.
5) CHIMNEY.
THE CHIMNEY HAS A LIGHT PRESS FIT. IT IS MADE REMOVABLE FOR TRANSPORT PURPOSES.
6) SAFETY VALVE
SAFETY VALVE NOT SHOWN ON DRAWINGS. BUILDER TO DESIGN OR PURCHASE.
7) CHECK VALVE
CHECK VALVE NOT SHOWN ON DRAWINGS. BUILDER TO DESIGN OR PURCHASE.
8) WATER LEVEL GAUGE
WATER LEVEL GAUGE NOT SHOWN ON DRAWINGS. BUILDER TO DESIGN OR PURCHASE.
9) INSULATION AND CLADDING
BOILER HEAT INSULATION AND CLADDING ARE NOT SHOWN ON DRAWINGS. IF THE BUILDER WISH TO INSTALL INSULATION MATERIAL AND CLADDING THE BOILER STRAPS HAVE TO BE ADJUSTED ACCORDINGLY

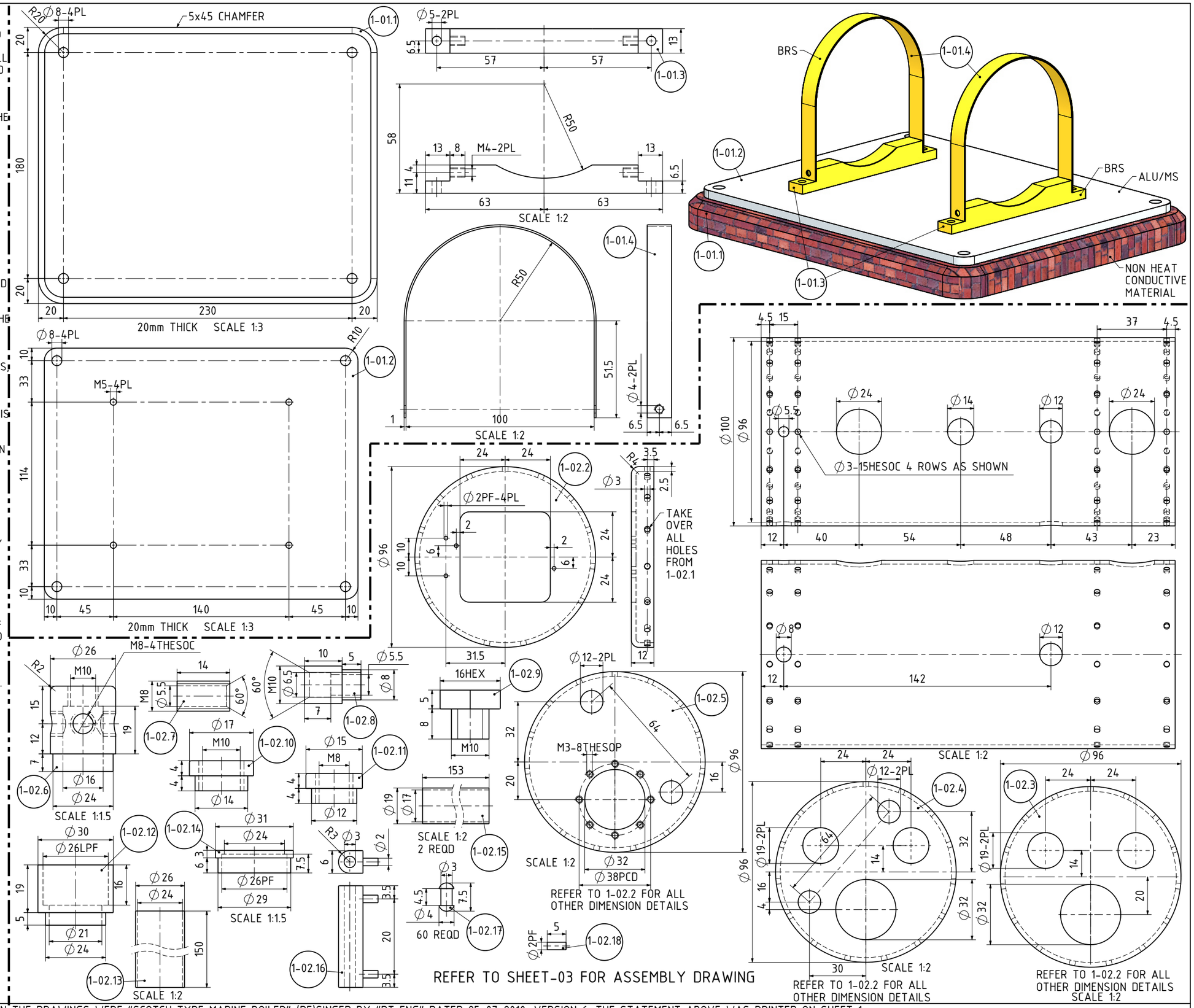

NOTES: FOUND ORIGINAL DRAWINGS ON THE INTERNET. THE TITLE ON THE DRAWINGS WERE "SCOTCH TYPE MARINE BOILER" (DE)SINGED BY "DT ENG" DATED 25-07-2010, VERSION 6. THE STATEMENT ABOVE WAS PRINTED ON SHEET 1.

TITLE A VERY SIMPLE GAS FIRED SCOTCH MARINE TYPE BOILER	DRAWING CONTENTS PARTS AND ASSEMBLIES NOTES	PROJECT No 01-47-00 JDW DRAUGHTING SERVICES J.A.M. DE WAAL. 12 BRIGHTWELL STREET PAPAKURA 2110. NEW ZEALAND. PHONE: 0064 09 2988815. MOB: 0211791000 E-MAIL: dewaal@xtra.co.nz.	PROJECTION JDWDS DATE DECEMBER 2021 SHEET: 02 OF 04 A3
			MODEL SCALE: 1:1 DWG SCALE: 1:1 @A3 OR AS SHOWN Copyright © J.A.M. DE WAAL PAPAKURA NZ No: 01-47-00-SHT-02

DRAWINGS ARE FOR PERSONAL USE ONLY NOT FOR COMMERCIAL PURPOSES