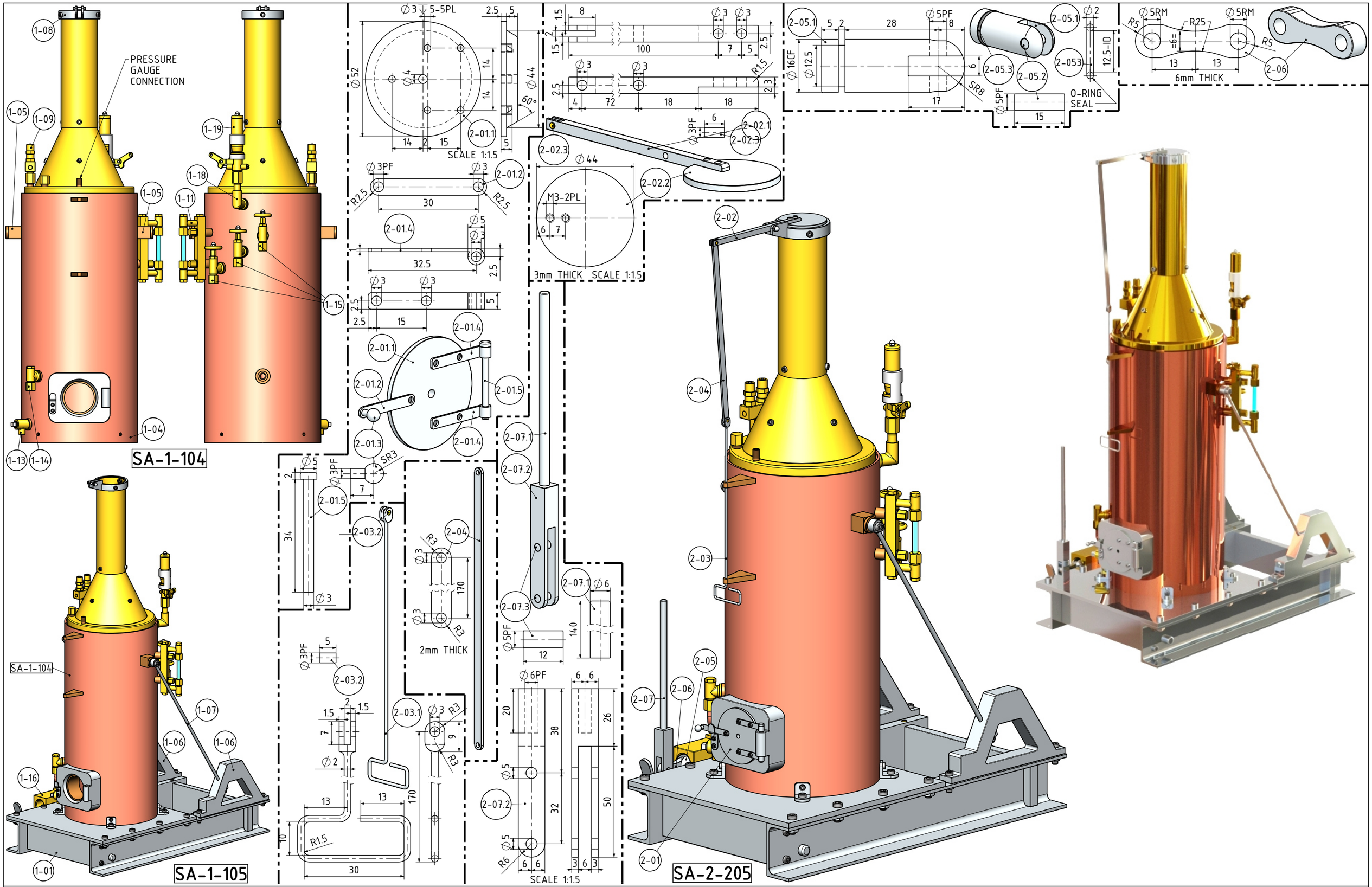

NOTES: THE ORIGINAL DRAWINGS WERE GIVEN TO ME. THE AUTHOR(S), DRAFTER(S), ORIGINATOR(S) ARE UNKOWN. NO TITLE BLOCK TO BE FOUND ON THE DRAWINGS. THE ORIGINAL DRAWING WERE IN FRENCH.

TITLE
A DONKEY SKID/SLEDGE MOUNTED COAL FIRED BOILER

DRAWING CONTENTS
PARTS AND ASSEMBLIES

PROJECT No 01-42-00

JDW DRAUGHTING SERVICES
J.A.M. DE WAAL. 12 BRIGHTWELL STREET PAPAKURA 2110. NEW ZEALAND. PHONE: 0064 09 2988815. MOB: 0211791000 E-MAIL: dewaal@xtra.co.nz.

PROJECTION JDWDS

MODEL SCALE: 1:1
DWG SCALE: 1:1 @A3 OR AS SHOWN

DATE NOVEMBER 2020

Copyright © J.A.M. DE WAAL PAPAKURA NZ

SHEET: 05 OF 05 A3 No: 01-42-00-SHT05

DRAWINGS ARE FOR PERSONAL USE ONLY NOT FOR COMMERCIAL PURPOSES