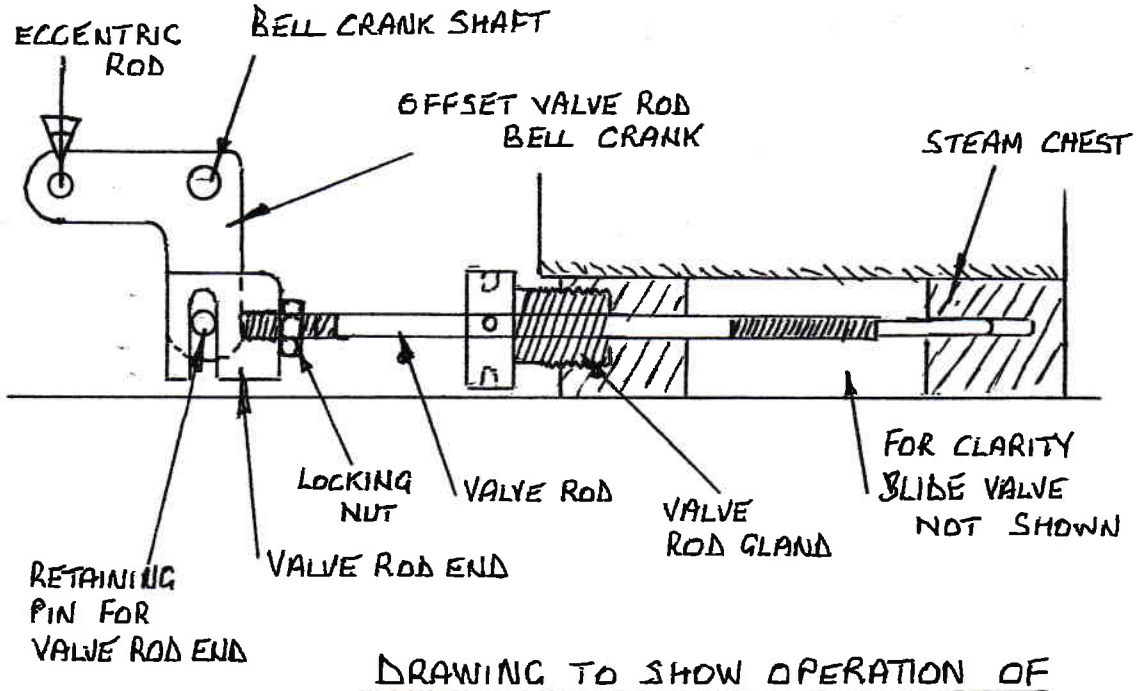

DRAWING TO SHOW OPERATION OF VALVE ROD

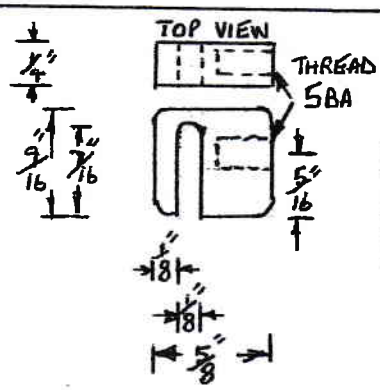

VALVE ROD END

1 OFF BRASS

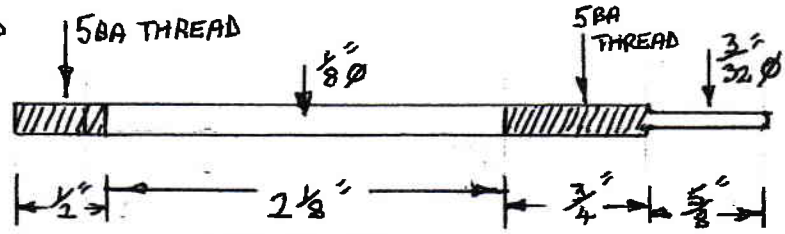

VALVE ROD

1 OFF S/S

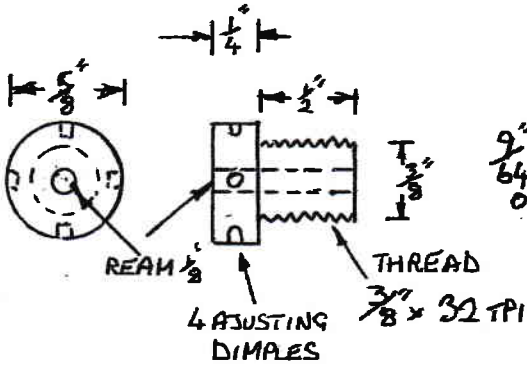

VALVE ROD GLAND

1 OFF BRASS

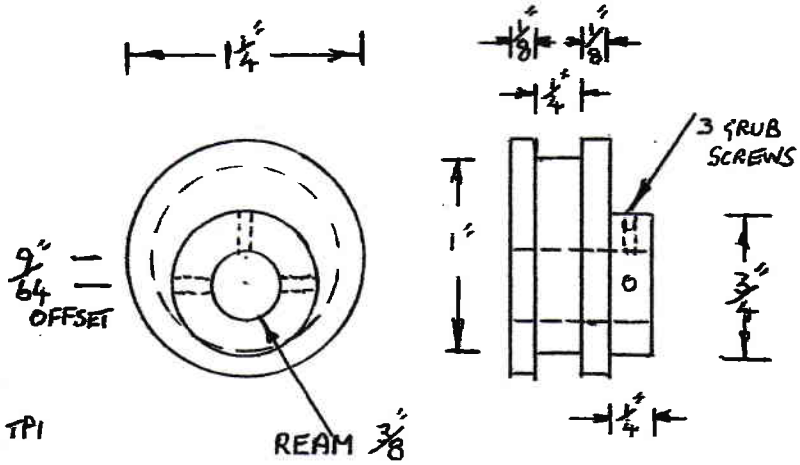

ECCENTRIC SHEAVE

1 OFF CAST IRON OR STEEL

THE "TRUNCH TROJAN" DWG Nº 15